AVR-DevBoard-Reloaded

Stand: 9.2.2006
Entwicklung: 8-2005

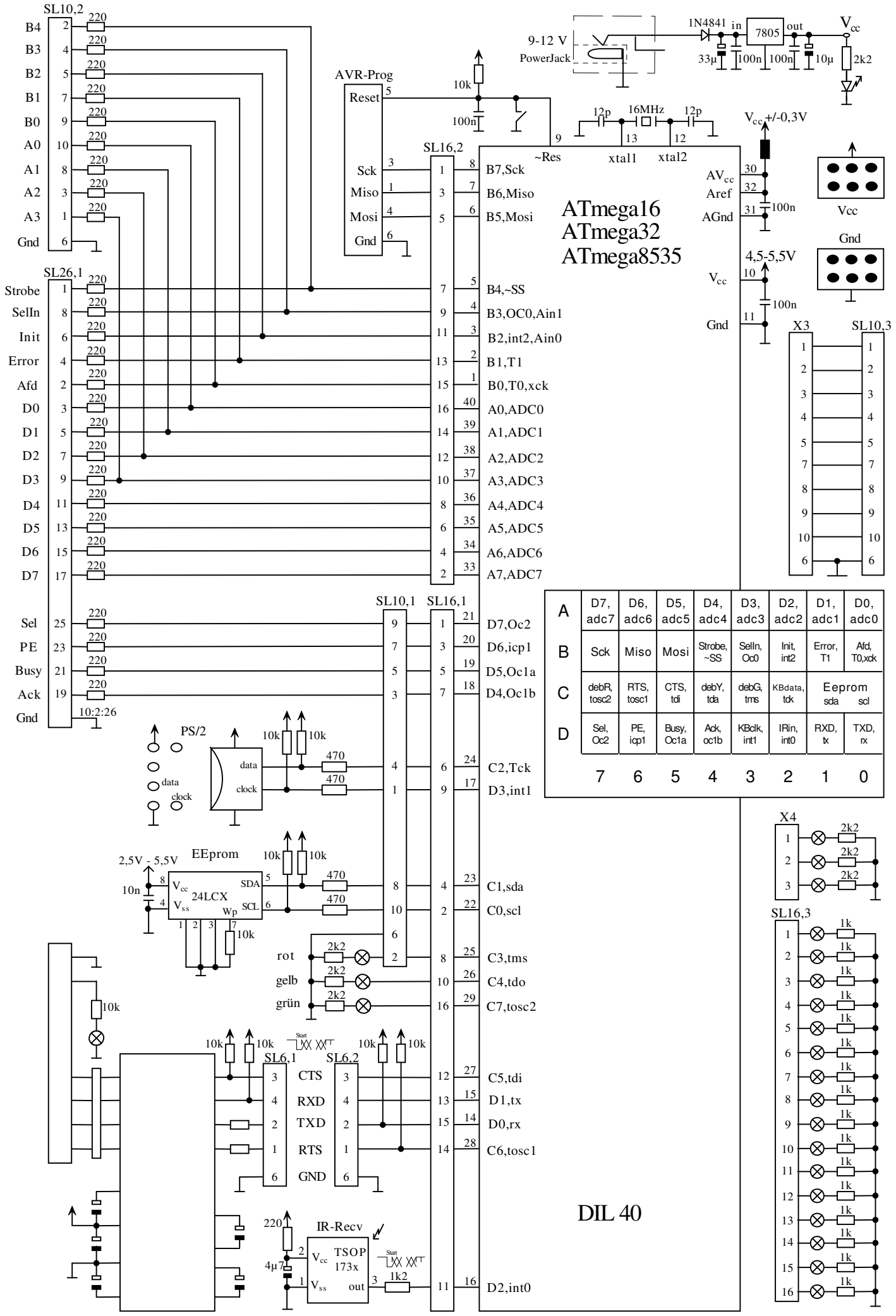

A	D7, adc7	D6, adc6	D5, adc5	D4, adc4	D3, adc3	D2, adc2	D1, adc1	D0, adc0
B	Sck	Miso	Mosi	Strobe, ~SS	SelIn, Oc0	Init, int2	Error, T1	Afd, T0,xck
C	debR, tosc2	RTS, tosc1	CTS, tdi	debY, tda	debG, tms	KBdata, tdk	Eeprom sda	Eeprom scl
D	Sel, Oc2	PE, icp1	Busy, Oc1a	Ack, oc1b	KBclk, int1	IRin, int0	RXD, tx	TXD, rx
	7	6	5	4	3	2	1	0