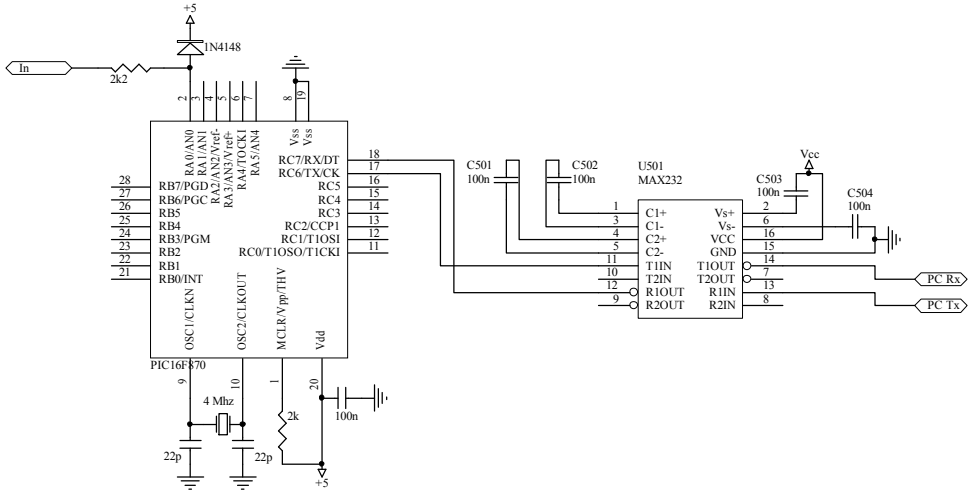

Title		
Size B	Number	Revision
Date: 25-Dec-2006	Sheet of	
File: D:\MyDocuments\Isdelia\elance_john\john.Ddb	Drawn By:	