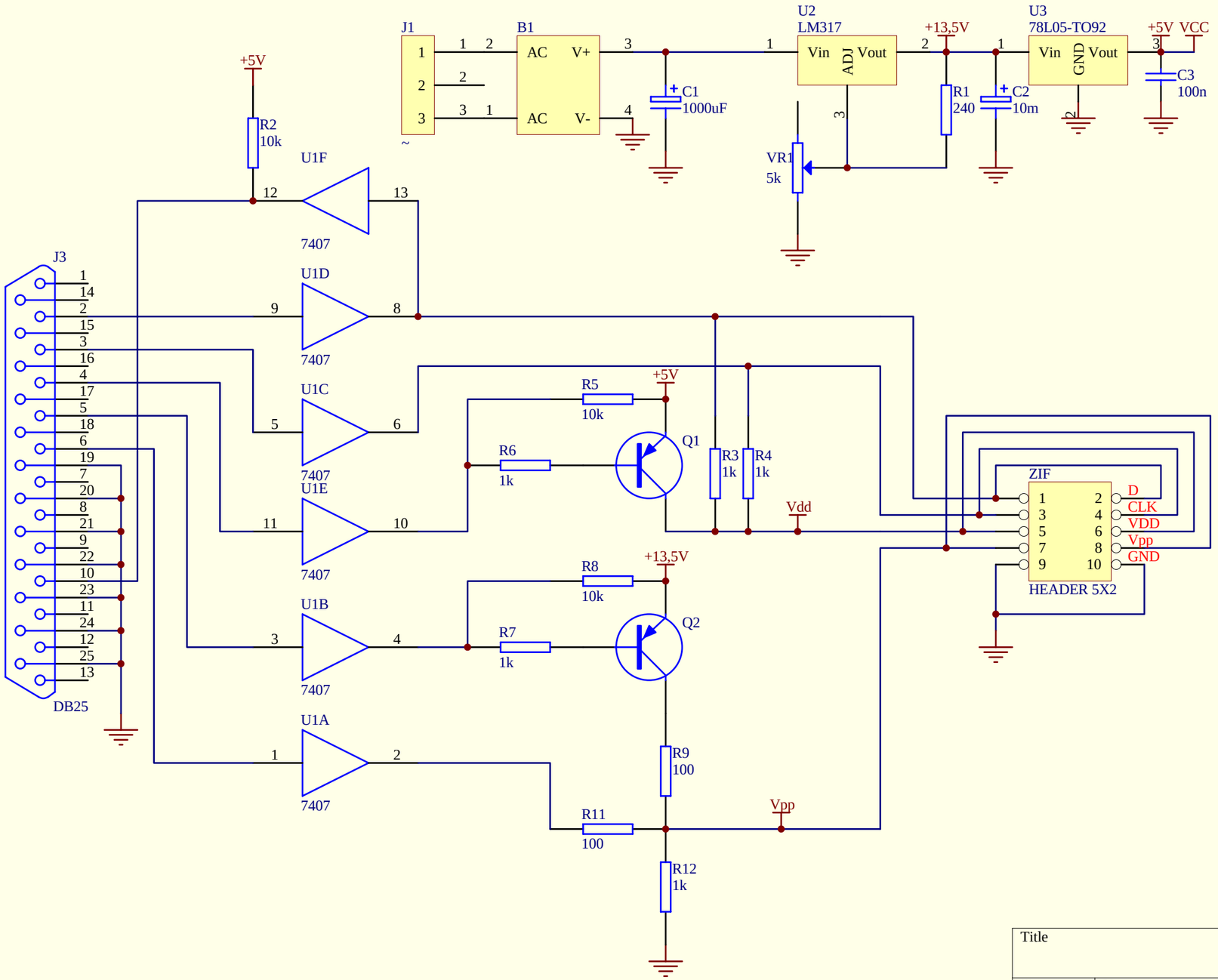

Title		
Size A4	Number	Revision
Date: 13-Aug-2007	Sheet of	
File: I:\Z_STD\SDD\Protel_G\EPIC-PROG\EPIC-PROG.ddb	Drawn By:	