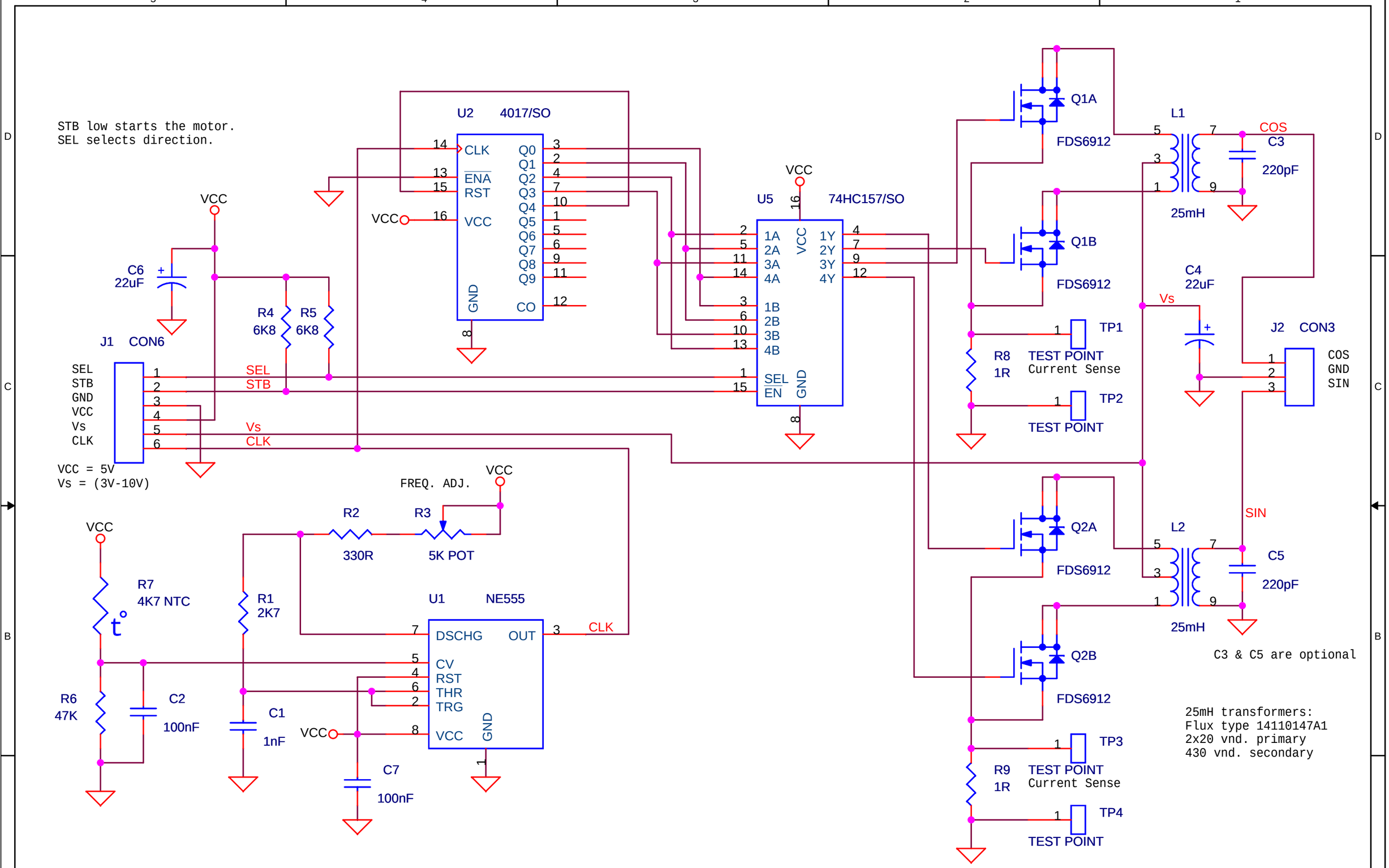

UP10 ApS Gydevang 42, DK-3450 Allerød, Denmark, Phone +45 43 31 17 50

Title	Driver for UP10 Piezo motor.	
Size A	Document Number Roda-job-1-Motordriver	Rev 01
Date: Monday, June 04, 2007	Sheet 1 of 1	