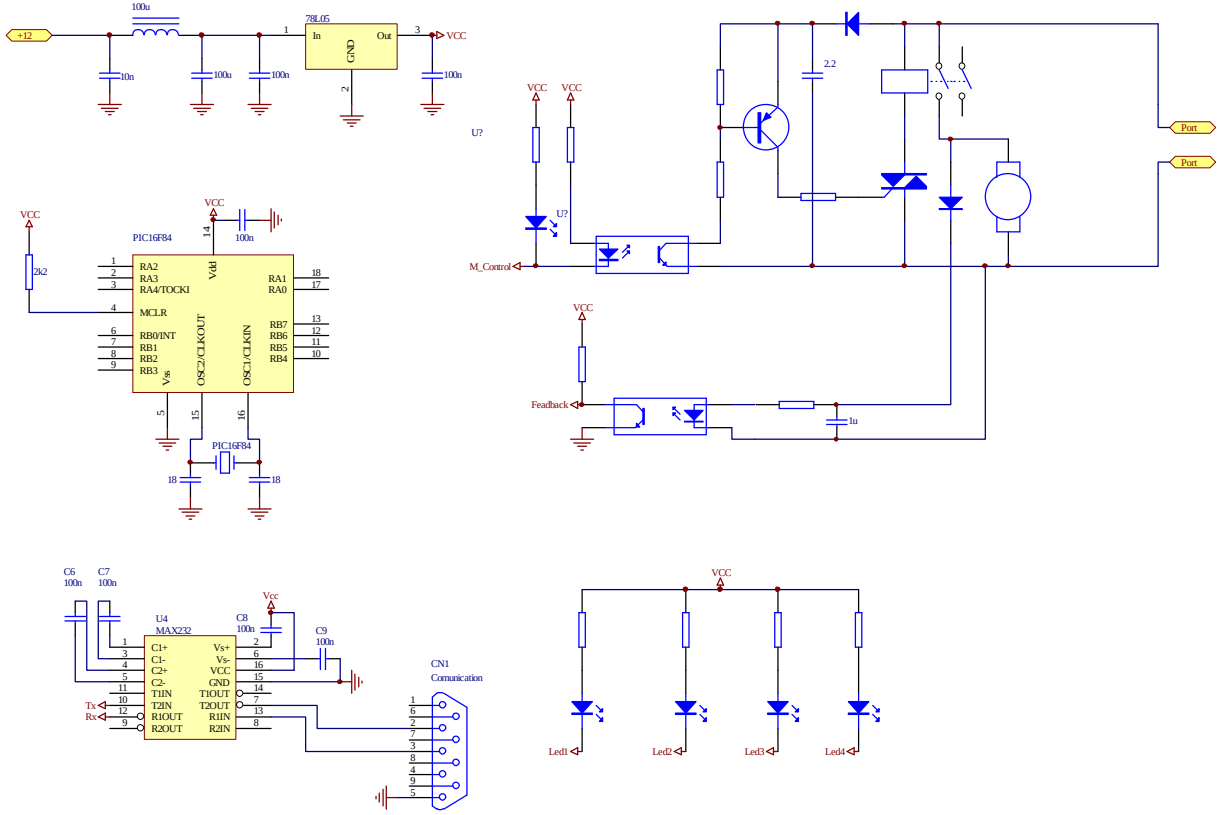

Title		
Size B	Number	Revision
Date: 26-Nov-2005	Sheet of	
File: C:\Documents and Settings\Administrator\My Documents\maniac\maniac.ddb	Drawn By:	